Angle-on-Angle
Cellar Doors

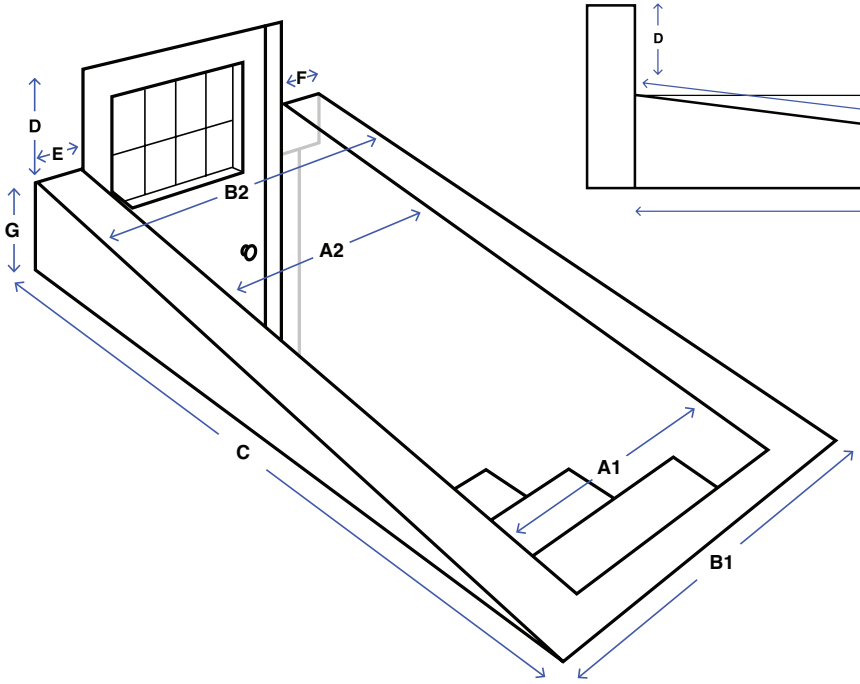

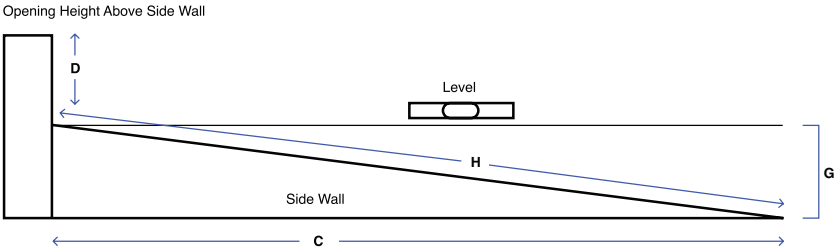

Note:
Do NOT measure the existing unit

Use the illustrations above as a guide to assist you while you take the required measurements below.

Occasionally, you need an Angle Door on an Angled foundation.

Please measure the actual foundation, not the existing unit. In addition, it is important to measure in a variety of places in the event that the foundation has cracked and/or shifted.

DIMENSIONS

A1 _____ A2 _____ B1 _____ B2 _____

C _____ D _____ E _____ F _____

G _____ H _____

STEELWAY
CUSTOM CELLAR DOORS

CellarDoors.com ▪ 1.877.553.2610 ▪ 290 E. Church Road, King of Prussia, PA 19406